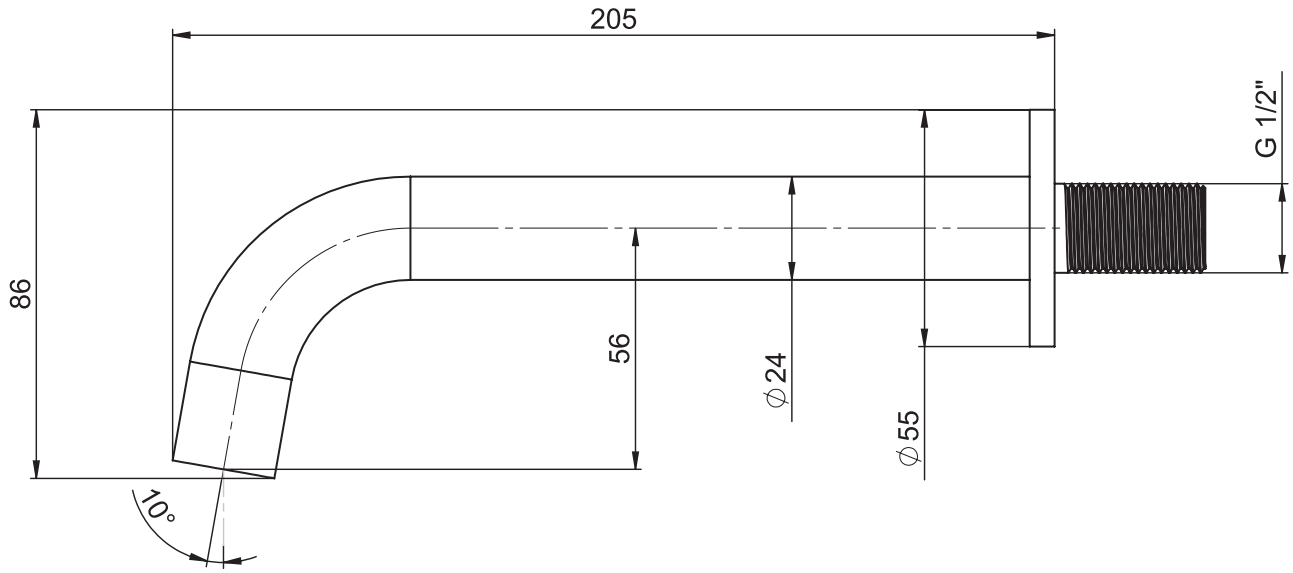
205
86
56
⌀24
⌀55
G 1/2"
10°

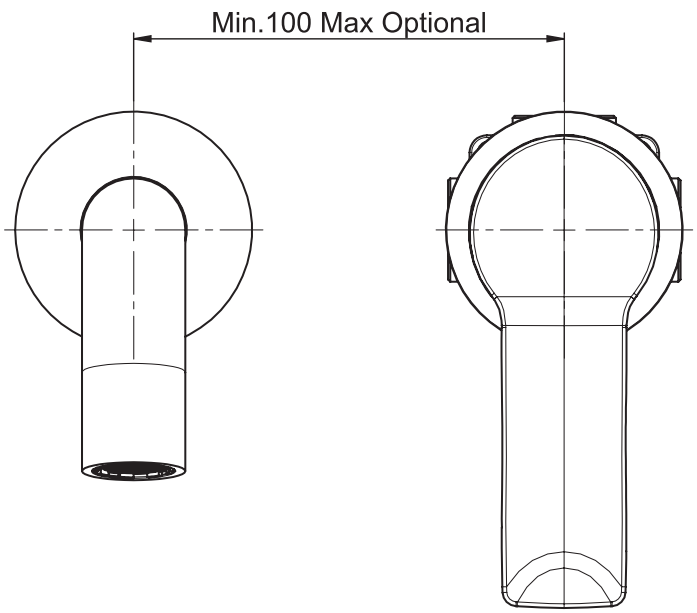
Min.100 Max Optional

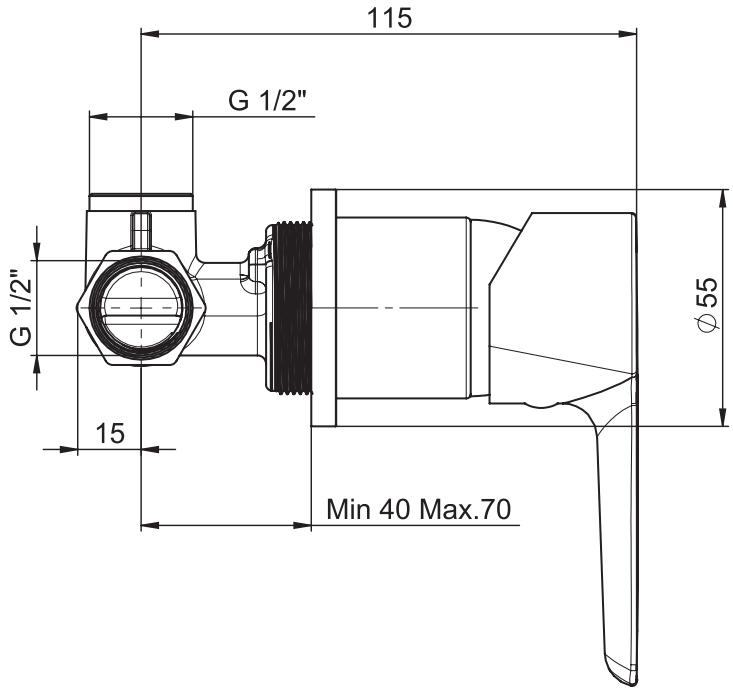
115
G 1/2"
G 1/2"
⌀55
15
Min 40 Max.70